ORTHOFLUOR FP

SF_6 circuit breaker from 7.2 to 36 kV

Indoor applications

Modular design

IEC, VDE and BS standards

Technical Specifications

AREVA T&D

AREVA

Main positive features

Endurance

The very high endurance originates in the minimum wear of the gas and of the contacts which are little stressed because of the low energy of the arc; this is due to:

- the intrinsic qualities of the gas,
- the limited arcing time,
- smaller arc length,
- the instability of the arc roots thanks to the use of hollow tungsten alloy arcing contacts,
- full separation of arcing contacts and current carrying contacts.

Safety

The FP circuit breakers operate under low pressure.

The internal pressure rise, due to gas compression and heating upon switching remains low.

A safety membrane vents any excessive pressure that might arise, however improbable.

At the atmospheric pressure, the circuit- breaker maintains sufficient dielectric characteristics and ensures safe load switching.

The rapid gas recombination and the injection of fresh gas into the inter-electrode space ensures perfect breaking at TRV values amply higher than those recommended by the applicable IEC standard.

Easy installation

The design of the separate pole circuit-breaker and the various possible arrangements make for fast and easy adaptation to many configurations of open units or of prefabricated cubicles.

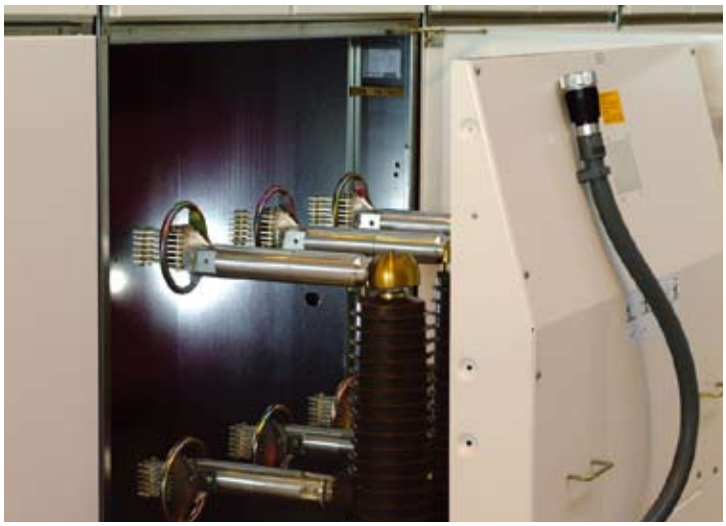

Fast reclosing

The complete range of circuit-breakers is fitted with the same operating mechanism. This device covers all the standardized cycles and namely the:
o - 0.3 sec. - CO - 15 sec. - CO fast cycle.

Capacitive switching

The SF_6 technique, particularly well suited to capacitor-bank switching and protection, precludes any overvoltage upon breaking which would jeopardize the durabilityu of the bank.

Maintenance

Each pole is designed into a gastight, life-sealed unit which is not to be opened over the full service life of the switch. Maintenance is therefore limited to simple lubrification of the operating mechanism and to pole replacement upon completion of their endurance limit.

Standards

ORTHOFLUOR circuit breakers meet the full requirements of all international standards such as UTE C 64100, VDE 0670, BS 5311, IEC 56.

Description of the modular range

FP 1716 B

The ORTHOFLUOR circuit-breaker is modular and leads to a wide range. Therefore, the ideal circuit-breaker exists for each particular application.

ORTHOFLUOR circuit-breakers are of the separate pole type. The pole units are supported on a common rigid frame which also supports the operating mechanism.

The separate pole unit structure enables the use of different frames and thus to produce equipments with different pole spacing. Each pole unit consists of an interrupting element housed in a single piece loaded epoxy resin enclosure.

The complete range is produced by combining different frames, enclosures and interrupting elements.

The interrupting element determines the performance in respect of:

- interruption over a given voltage range.
- overcurrent withstand,
- rated current carrying capacity.

The dielectric performance between input and output and between conductor and earth are determined by the enclosure.

The dielectric properties between phases depends only on the pole spacing.

Phase spacing selection

The standard frames used for the FP circuit breaker range exist in five phase spacings : 210 - 250 - 300 - 350 and 400 mm.
Although it is generally possible to install any pole on anyone of these frames, it is preferable to choose a phase distance with a view to reduce overall dimensions.
The table reads, for switchgear ratings of less than 1250 A the preferable phase spacing as a function of the required insulation level voltage.
For higher ratings, the preferable phase spacing value is the one immediately higher.
Some equipment (such as large lugs or direct releases) may also require a higher value.

Equipment designation

The circuit-breaker switch designation comprises 4 parts.

FP	24	25	D

- FP: Product range
- 24: Higher rated voltage
- 25: Breaking capacity at higher rated voltage. For voltages less than 10 kV, the figure will be preceded by a zero
- D: Letter reading the rated current

A = 400
B = 630
C = 800
D = 1250
E = 1600
F = 2000
G = 2500
H = 3150
J = 4000

Decimals are not used in equipment designation, for example : 7.2 kV ⟶ 07

Pole spacings mm	210	250	300	350	400
Circuit breaker type FP ☐ ☐ ☐ ☐	0 7 ☐ ☐ 1 2 ☐ ☐ 1 7 ☐ ☐	1 2 ☐ ☐ 1 7 ☐ ☐ 2 4 ☐ ☐	2 4 ☐ ☐ 3 6 ☐ ☐	3 6 ☐ ☐	3 6 ☐ ☐

Description of a pole

Each pole consists of a single piece loaded epoxy resin enclosure, individually sealed, which may house one or the other of the following interrupting element technology :
- dual flow autopneumatic (puffer)
- dual flow autoexpansion (thermal expansion + puffer).

An absorbing catalyst accelerates the gas recombination and fixes residual impurities after each break.

A safety membrane ensures opening to atmosphere in the very remote event of any accidental abnormal overpressure.

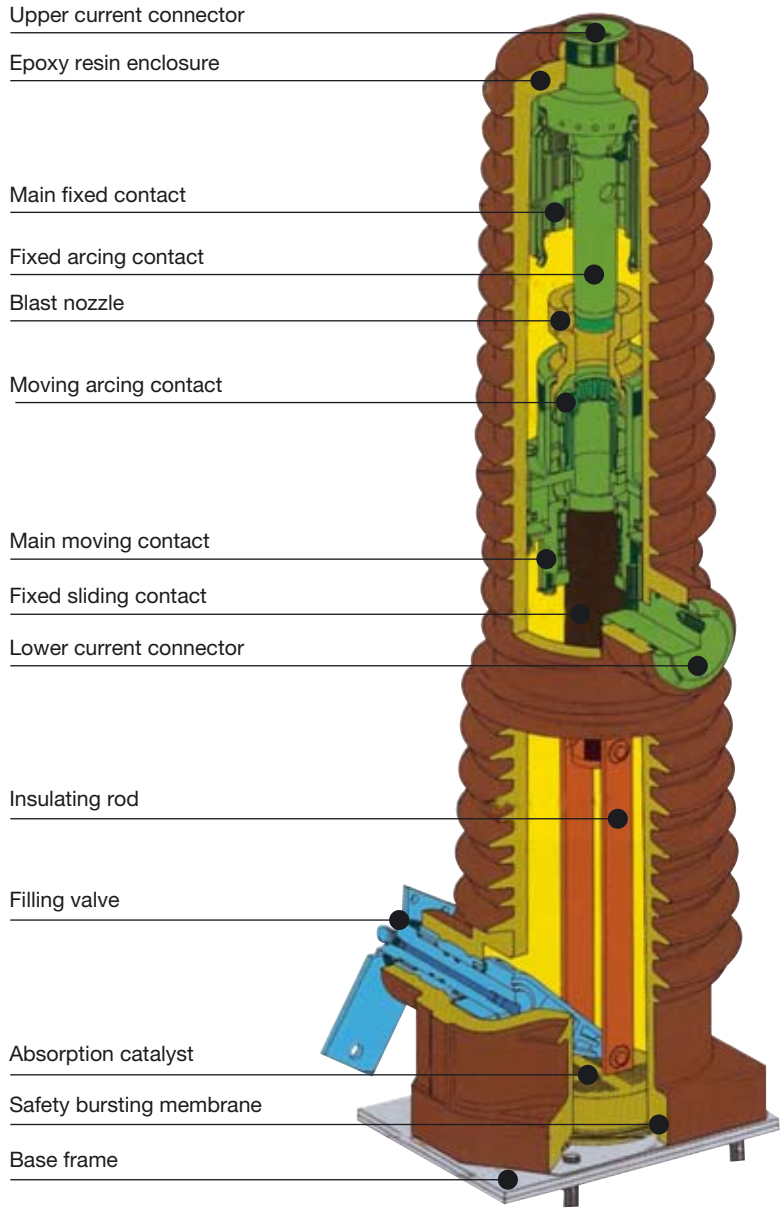

FP 3616 D pole

Breaking operation

Autopneumatic (puffer)

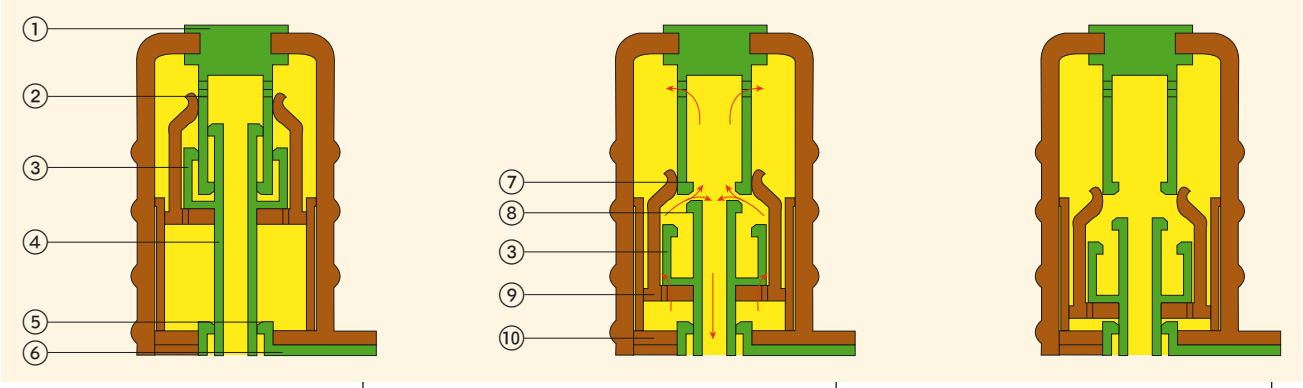

"CLOSED POSITION"

Current flows between terminals 1 and 6 of the equipment via main fixed contact 2 and 5, sliding contacts 3 and 5 and rod 4.

DURING OPENING

Main moving contacts 3 disconnect first. Arcing then takes place between arcing contacts 7 and 8. The SF_6 gets compressed between moving piston 9 and the bottom of piston 10 and blasts the arc in two opposite directions.

"OPEN POSITION"

The disconnection gap is filled with SF_6 and the equipment is ready for reclosing.
This type of circuit-breaker is at an SF_6 gas pressure of 3.5 bars relative. It does not require pressure monitoring (however this device may be supplied for each pole on request).

Thermal expansion breaking

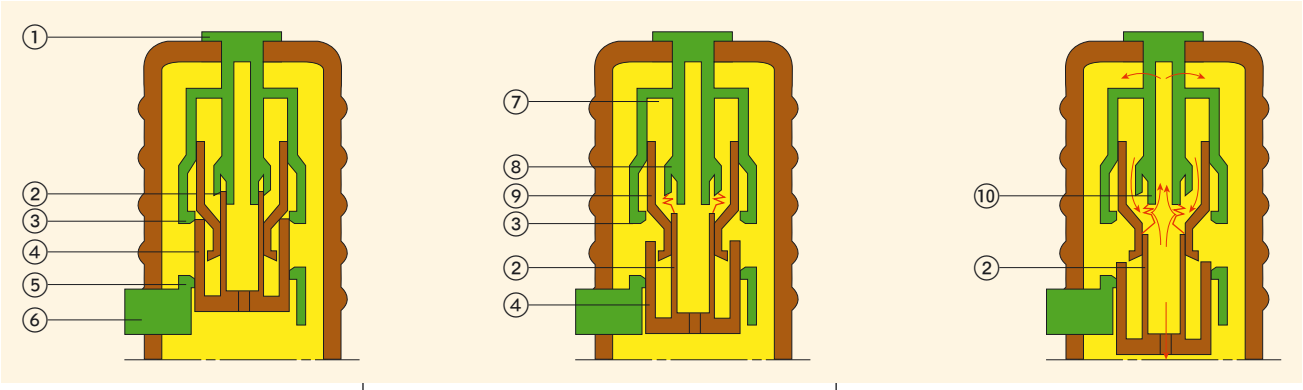

"CLOSED POSITION"

Current flows between terminals 1 and 6 of the equipment via upper contact 3, lower contact 5 and moving part 4.

PRESSURE BUILD-UP

- Contacts 3 and 4 disconnect.
- Arcing takes place between arcing contacts 8 and 2. The energy released by the arc compresses the SF_6 in the volume closed by nozzle 9.

ARC BLASTING

As the opening motion goes on, the arc is transferred between arcing contacts 2 and 10. The gas released blasts the arc in two opposite directions. This type of circuit-breaker is at an SF_6 gas pressure of 5.5 bars relative. It is equipped with a pressure monitoring device on each pole, set to close an alarm contact at 4.35 bars. At this pressure the circuit-breaker retains full breaking and withstand characteristics.

Performance data

Main characteristics

Rated voltage kVV	Dilectric tests		Breaking capacity kA rms	Rated continuous service current A								
	impulse kVc	50 Hz kV rms		400	630	800	1250	1600	2000	2500	3150	4000
7.2	60	20	16	FP0716A	FP0716B	FP0716C	FP0716D	FP0716E	FP0716F	FP0716G	FP0716H	FP0716J
			20	FP0720A	FP0720B	FP0720C	FP0720D	FP0720E	FP0720F	FP0720G	FP0720H	FP0720J
			25	FP0725A	FP0725B	FP0725C	FP0725D	FP0725E	FP0725F	FP0725G	FP0725H	FP0725J
			31.5	FP0731A	FP0731B	FP0731C	FP0731D	FP0731E	FP0731F	FP0731G	FP0731H	FP0731J
			40	FP0740A	FP0740B	FP0740C	FP0740D	FP0740E	FP0740F	FP0740G	FP0740H	FP0740J
			50	FP0750A	FP0750B	FP0750C	FP0750D	FP0750E	FP0750F	FP0750G	FP0750H	FP0750J
12	75	28	16	FP1216A	FP1216B	FP1216C	FP1216D	FP1216E	FP1216F	FP1216G	FP1216H	FP1216J
			20	FP1220A	FP1220B	FP1220C	FP1220D	FP1220E	FP1220F	FP1220G	FP1220H	FP1220J
			25	FP1225A	FP1225B	FP1225C	FP1225D	FP1225E	FP1225F	FP1225G	FP1225H	FP1225J
			31.5	FP1231A	FP1231B	FP1231C	FP1231D	FP1231E	FP1231F	FP1231G	FP1231H	FP1231J
			40	FP1240A	FP1240B	FP1240C	FP1240D	FP1240E	FP1240F	FP1240G	FP1240H	FP1240J
			50	FP1250A	FP1250B	FP1250C	FP1250D	FP1250E	FP1250F	FP1250G	FP1250H	FP1250J
17.5	95	36	12.5	FP1712A	FP1712B	FP1712C	FP1712D	FP1712E	FP1712F	FP1712G	FP1712H	FP1712J
			16	FP1716A	FP1716B	FP1716C	FP1716D	FP1716E	FP1716F	FP1716G	FP1716H	FP1716J
			20	FP1720A	FP1720B	FP1720C	FP1720D	FP1720E	FP1720F	FP1720G	FP1720H	FP1720J
			25	FP1725A	FP1725B	FP1725C	FP1725D	FP1725E	FP1725F	FP1725G	FP1725H	FP1725J
			31.5	FP1731A	FP1731B	FP1731C	FP1731D	FP1731E	FP1731F	FP1731G	FP1731H	FP1731J
			40	FP1740	FP1740B	FP1740C	FP1740D	FP1740E	FP1740F	FP1740G	FP1740H	FP1740J
24	125	50	12.5	FP2412A	FP2412B	FP2412C	FP2412D	FP2412E	FP2412F	FP2412G	FP2412H	FP2412J
			16	FP2416A	FP2416B	FP2416C	FP2416D	FP2416E	FP2416F	FP2416G	FP2416H	FP2416J
			20	FP2420A	FP2420B	FP2420C	FP2420D	FP2420E	FP2420F	FP2420G	FP2420H	FP2420J
			25	FP2425A	FP2425B	FP2425C	FP2425D	FP2425E	FP2425F	FP2425G	FP2425H	FP2425J
			31.5	FP2431A	FP2431B	FP2431C	FP2431D	FP2431E	FP2431F	FP2431G	FP2431H	FP2431J
			40	FP2440A	FP2440B	FP2440C	FP2440D	FP2440E	FP2440F	FP2440G	FP2440H	FP2440J
36	170	70	12.5	FP3612A	FP3612B	FP3612C	FP3612D	FP3612E	FP3612F	FP3612G	FP3612H	FP3612J
			16	FP3616A	FP3616B	FP3616C	FP3616D	FP3616E	FP3616F	FP3616G	FP3616H	FP3616J
			20	FP3620A	FP3620B	FP3620C	FP3620D	FP3620E	FP3620F	FP3620G	FP3620H	FP3620J
			25	FP3625A	FP3625B	FP3625C	FP3625D	FP3625E	FP3625F	FP3625G	FP3625H	FP3625J
			31.5	FP3631A	FP3631B	FP3631C	FP3631D	FP3631E	FP3631F	FP3631G	FP3631H	FP3631J

Refer to page 8 for dimensions.

Colors refer to recommended phase spacings.

210 250 300 350 400

Other characteristics

• Overcurrent rating

The kA making current of all the circuit breakers in the FP range is equal to 2.5 times the breaking current KA r.m.s. (for other values please consult us).
The short-time withstand current is equal to the breaking current held for 1 or 3 seconds (please consult us).

• Capacitor switching
- In single capacitor-bank :
  for voltages < 24 kV : 1000 A
  36 kV : 800 A
- Back-to-back banks : please consult us.

• Operating cycles
The FP type circuit breakers allow for the following cycles :
A. : O - 3 min CO - 3 min CO
B. : CO - 15 s - CO
C. : O - 0,3 s - CO - 3 min - CO
(For this fast cycle, please consult us).

• Operating time
Irrespective of the auxiliary supply voltage and of the breaking current values, the average operating times, expressed in ms, are :

Average operating time	Trip coil (ms)	Undervoltage trip coil (ms)
Ouverture.....	50	110
Arc maximum.....	20	20
Temps total de coupure.....	70	130

Life span

• Electrical
The very great durability is due to the minimal deterioration of the gas and wear of the contacts which are but little affected by the low arc energy in turn due to :
- the intrinsic qualities of the gas,
- the short arcing time,
- the short length of the arc,
- the instability of the arc roots arising from the use of hollow arcing contacts of a tungsten alloy.

The endurance of the ORTHOFLUOR type FP breakers is inversely proportional to the square of the current interrupted.
The adjacent curves show the permissable number of interruptions for a moderate level of wear as a function of the current interrupted.

• Mechanical :
By the very principle of operation, the movements of the mechanical parts are damped naturally by the compression of the gas and the level of operational energy is moderate. The self-centring of the tolerances make the equipment insensitive to any misalignment attributable to wear.

• Gas tightness :
This is ensured by a dynamic joint at the point of entry of the shaft.
The gas tightness is adequate for equipments sealed for life
maximum rate of leakage :
10-6 cm^3 x bar/sec.

Number of breaks

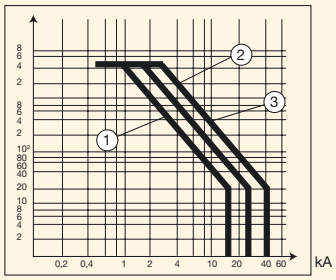

1. FP 0716 - FP 1216 - FP 1712
   FP 1716 - FP 2412 - FP 2416
   FP 3612 - FP 3616
2. FP 0725 - FP 1225 - FP 2425
   FP 3625
3. FP 0740 - FP 1240

Number of breaks

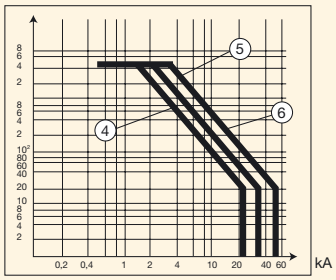

4. FP 0720 - FP 1220 - FP 1720
   FP 2420 - FP 3620
5. FP 0731 - FP 1231 - FP 1731
6. FP 0750

Overall dimensions

Front arrangement

References		Dimensions in mm												
X		210			250			300			350			400
		< 31.5 kA	≥ 31.5 kA ≤ 40 kA	> 40 kA ≤ 50 kA	< 31.5 kA	≥ 31.5 kA ≤ 40 kA	> 40 kA ≤ 50 kA	< 31.5 kA	≥ 31.5 kA ≤ 40 kA	> 40 kA ≤ 50 kA	≤ 25 kA ≤ 24 kV	≤ 25 kA > 24 kV	≥ 31.5 kA ≤ 40 kA	≤ 31.5 kA
A	≤ 1250 A	680	-	-	740	-	-	840	840	-	-	940	-	1040
	> 1250 A		680	700	740	740	740	840	840	840	940	940	940	1040
B	≤ 1250 A	841	-	-	841	-	-	-	-	-	-	931	-	1013
	> 1250 A	894	894	1060	894	1013	1060	894	1013	1060	984	984	1013	1013
	> 2500 A	-	-	-	-	-	-	-	-	-	-	-	-	1060
C		476	476	595	476	595	595	476	595	595	476	566	595	595
D	≤ 1250 A	470	-	-	470	-	-	-	-	-	-	470	-	563
	> 1250 A	520	563	600	520	563	600	520	563	600	520	520	563	563
	> 2500 A	-	-	-	-	-	-	-	-	-	-	-	-	600

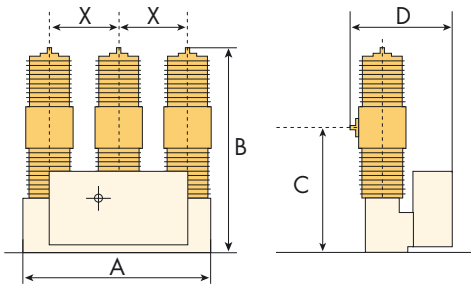

Front arrangement

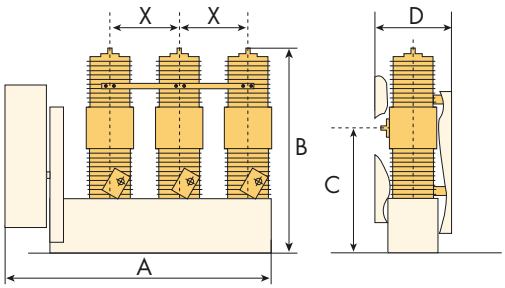

Longitudinal arrangement

Longitudinal arrangement

Reference		Dimensions in mm												
X		**210**			**250**			**300**			**350**			**400**
		< 31.5 kA	≥ 31.5 kA ≤ 40 kA	> 40 kA ≤ 50 kA	< 31.5 kA	≥ 31.5 kA ≤ 40 kA	> 40 kA ≤ 50 kA	≤ 31.5 kA	< 31.5 kA ≤ 40 kA	> 40 kA ≤ 50 kA	≤ 25 kA ≤ 24 kV	≤ 25 kA > 24 kV	≥ 31.5 kA ≤ 40 kA	≤ 31.5 kA
A	≤ 1250 A	1040	-	-	1040	-	-	1220	-	-	1370	1370	-	-
	> 1250 A	1040	1040	-	1120	1050	1120	1220	-	1220	1370	1370	-	1454
	> 2500 A	-	-	1040	-	-	-	1220	1220	1370	1354	-	1370	1470
B	≤ 1250 A	841	-	-	841	-	-	985	-	-	894	-	-	-
	> 1250 A	894	894	-	894	985	1032	985	-	1032	-	931	-	970
	> 2500 A	-	-	1032	-	-	-	894	985	894	-	985	1032	1032
C	≤ 1250 A	476	-	-	476	-	-	476	476	476	567	-	-	-
	> 1250 A	-	476	-	-	567	-	-	-	-	-	567	-	567
	> 2500 A	-	-	567	-	-	567	-	-	567	-	-	567	-
D		376	376	376	376	376	376	376	376	376	376	376	376	376

The dimensions given in the table above are applicable to our standard range. For other requirements, please consult us.
Weight : Up to 1250 A : 115 kg to 175 kg. / Above 1250 A : 215 kg to 235 kg.

Description of the operating mechanism

The FP range of circuit breakers is equipped with an operating mechanism using the energy stored in a spring. This mechanism can be of two types :
- BLR, manually charged
- BLRM, electrically charged.

The sturdiness and reliability of this operating mechanism have been demonstrated for 30 years.

The loaded closing spring is held by a latch-in. The manually or electrically controlled release of this latch-in causes :
- the closing spring to fully expand,
- the breaker to close,
- the tripping spring to be charged.

The cuircuit breaker, controlled by the tripping spring, is held in the closed position, ready to open instantaneously, by a further latch-in.

It is then possible to charge the closing spring again while the breaker is in the closed position, which authorizes a fast reclosing cycle.

The BLRM mechanisms are the motorized version of the BLR operating mecanism and they ensure automatic charging of the closing spring.

They are especially recommended for circuit breakers intended to ensure a cycle of fast reclosing operation generally followed by a cycle of slow closing operation.

Depending on the torque required, these control mechanisms are fitted with different types of springs.

As appropriate, closing and tripping operations are controlled :
- manually, by means of a mechanical button situated on the front panel of the operating mechanism,
- mechanically, by means of direct releases,
- electrically, by means of tripping and closing coils.

The BRLM control mechanisms can be reset manually.

A visual indicator, situated on the front panel of the control mechanism, indicates :
- the position of the circuit breaker,
- the status of the closing spring.

Accessories

The simple shape of the various SF6 circuit breakers enable them to receive a large number of accessories.

For instance, the following can be mentioned :
- electronic releases which do not require an auxiliary supply
- rollers
- connection terminals.

Other elements facilitating the quick disconnection of the circuit breaker :
- clips and connectors
- connection lugs.

When placing an order, specify :
1 The type of equipment
2 The rated characteristics
  - voltage
  - current
  - frequency
  - breaking current
  - operation cycles.
3 The distance between pole centre-lines
4 Front or longitudinal arrangement
5 The equipment accessories and operating mechanism.

Operating mechanism

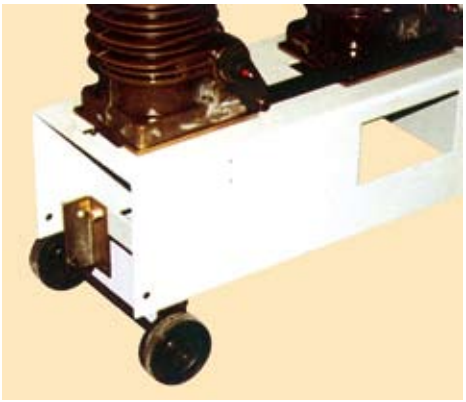

Rollers

Table of power consumptions

Values given as an indication.

Component or function	Direct current	Alternating current
Motor voltage for recharging spring: - 24 - 48 - 60 - 110 - 125 - 220 Vdc - 110 - 230 Vac	≈ 210 W	≈ 230 W
Closing - tripping - Electromagnet AMT (E and D)	80 W	80 W
Tripping - Electromagnet MIA	30 W	30 W
Continuous heating		30 W

Electrical schematic diagrams

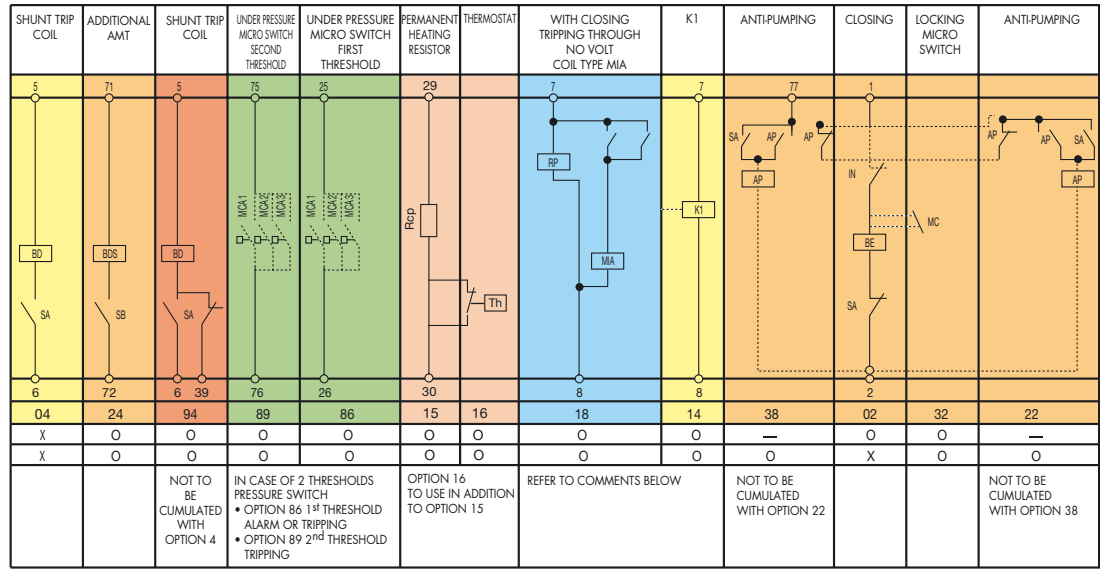

Captions :
X : Basic equipment
O : Option
- : Not an option

Notes : Use of REFLEX relay renders the option 14 compulsory and prohibits the use of option 18.

- Options that can not be chosen simultaneously : 18 and 14.
- With option 18 it is compulsory to choose option 32.
- Option 32 can be chosen only when either 18 or option 02 is also chosen.

Overall all dimensions

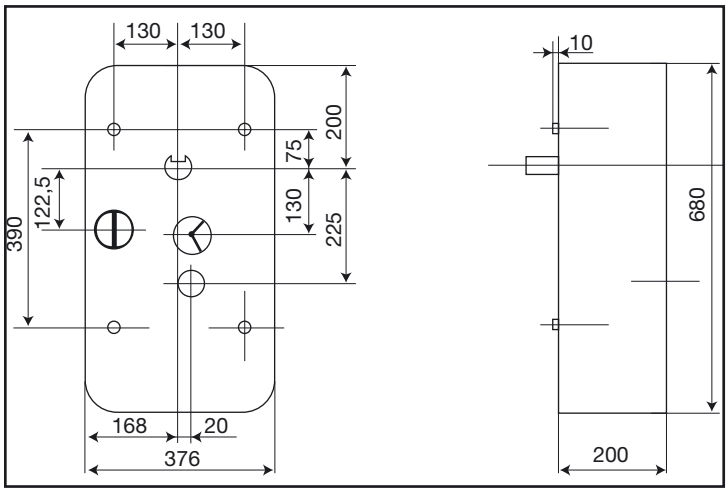

Weight : BLR 56 kg - BLRM 60 kg.

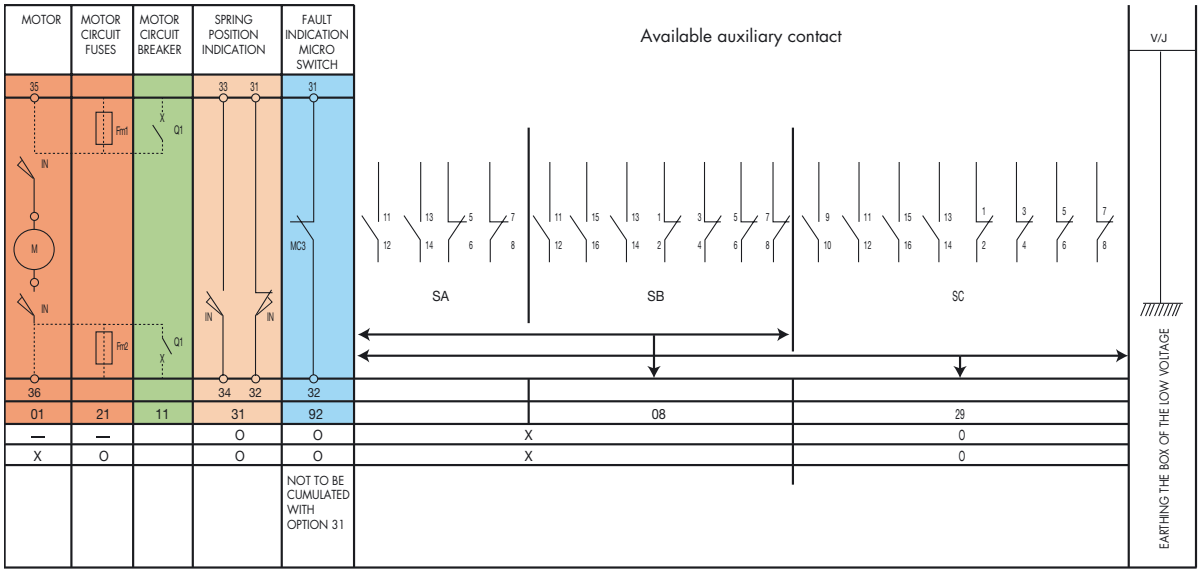

Attention :
The 19 circuits wired to a terminal are a maximum for circuit breakers supplied loose.

Notes : The choice of one of the options 11 or 21 prohibits the use of the either.
- Option 11 or 21 prohibits the use of the either.
- Option 11 : with this option, there are not the terminals 35 and 36. The wiring of the motor is made directly on the miniature circuit breaker Q1 terminals 1 and 3.
- Option 21 : On the fuses Fm1 and Fm2.

Reflex Action is a complete solution

Reflex Action is a device that combines a circuit-breaker and a protection relay not requiring an auxiliary power supply. It has been developed to protect installations not equipped with a reliable LV power source and is totally autonomous.

Numerous applications are possible

Reflex Action has been designed to satisfy various types of requirement:

- Protection of MV feeders in primary distribution
- Protection against short-circuits and ground faults in LV or MV distribution transformers
- Protection of overhead and underground lines.

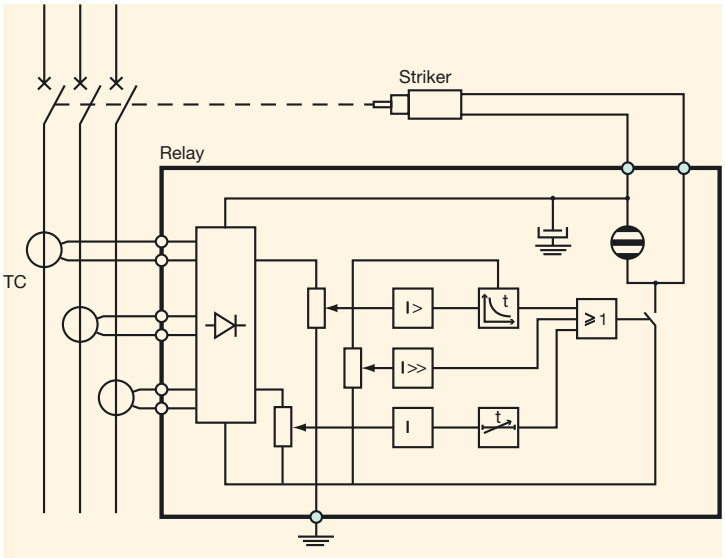

Internal synopsis

Description

The Reflex Action circuit-breaker is a compact device comprising four main components:

- a FP circuit-breaker which uses SF_6 technology,
- a low consumption electronic protection relay guaranteeing maximum reliability and eliminating the need to install and maintain auxiliary batteries,
- a low consumption striker,
- three specific current transformers to measure the currents and to power the relay.

A circuit-breaker adapted for network requirements

Reflex Action has been developed to adapt easily to a network configuration. To cover a very wide range of currents, 2 current transformer gauges are sufficient to protect installations whose nominal currents range from 10 to 800 A (using the same relay and the same striker). The relay is then configured by simply changing the position of switches situated on the circuit-breaker's front panel.

Our electronic equipments passed electromagnetic compatibility test (EMC) with highest severity level specified in IEC standards.

Total flexibility

The settings for tripping time delays and thresholds are completely independent.

The wide range of settings for time delays ensures the selectivity of the circuit-breakers is extremely precise when phase faults and homopolar faults occur.

- 16 settings from 1.25 to 20 seconds for phase faults,
- 8 settings from 0.2 to 0.9 second for earth faults.

A simplified option provides phase fault detection with two current transformers.

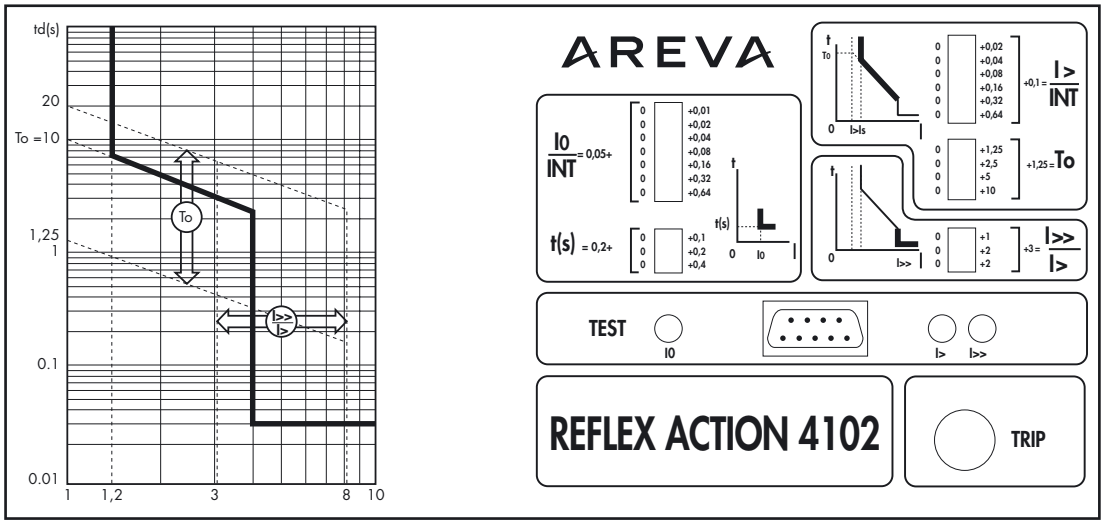

Tripping curve *Front plate display*

Designed for users

• Simple to use

All the threshold and time delay settings are clearly indicated on the front panel.

An electro-mechanical indicator is located on the front panel, which can be manually reset, records the functioning of the protection part.

• Easy to inspect

The relay does not require any maintenance, but it can be tested at any time. To allow this, a pocket mechanism is available to test operation of the relay and to trip the circuit-breaker.

Technical features

Relay and current transformers characteristics

Solid state relay		Without power supply
Current setting range		From 10 to 800 A
Tripping indicator		Electromechanical with manual reset
Current transformer		
Two values	**INT**	100 or 630 A
Thermal withstand capacity (Continuous)		2 x INT
	(3 s)	25 kA
Overcurrent protection		**ANSI: 50 - 51**
Setting range	**I>**	From 0.1 to 1.36 **INT** by step 0.02
Low trip threshold	**Is**	1.2 x **I>**
Inverse time delay	**To**	From 1.25 s to 20 s by step 1.25 s
Short circuit current setting	**I>>**	From 3 to 8 x **I>** by step 1
Short circuit tripping delay		30 ms
Earth fault protection		**ANSI**: **51N**
Setting range	**Io**	From 0.05 to 1.32 **INT** by step 0.01
Definite time delay	**t(s)**	From 0.2 s to 0.9 s by step 0.1 s
Capability		
Relay curves		IEC 255-3
Electromagnetic compatibility		IEC 1000-4
Climatic environmental testing		IEC 68-2
Vibration tests		10 000 C.B operations

SF_6 circuit breaker performance

Selection guide (according to IEC standard)

Rated voltage	Withstand voltages		Breaking capacity	Rated current continuous duty	
kV	Lightning impulse (kVP)	50/60 Hz 1 mn kV rms	kA	630 A	800 A
12	75	28	16	RXFP 1216B	RXFP 1216C
			25	RXFP 1225B	RXFP 1225C
			29	RXFP 1229B	RXFP 1229C
24	125	50	16	RXFP 2416B	RXFP 2416C
			25	RXFP 2425B	RXFP 2425C
36*	170	70	16	RXFP 3616B	RXFP 3616C
			25	RXFP 3625B	RXFP 3625C

** Only with low voltage current transformers : see technical specification : T001-STS-11/99 (consult us).*

BLR operating mechanism equipment

	MANUAL operating system	MOTORISED operating system
Manual tripping and closing button	■	■
Optical position indicator (circuit breaker and closing spring positions)	■	■
Striker	■	■
8 auxiliary contacts (4 NO / 4 NC)	■	■
Operations counter		■
Closing coil		■
Anti-pumping relay		■

Frontal arrangement

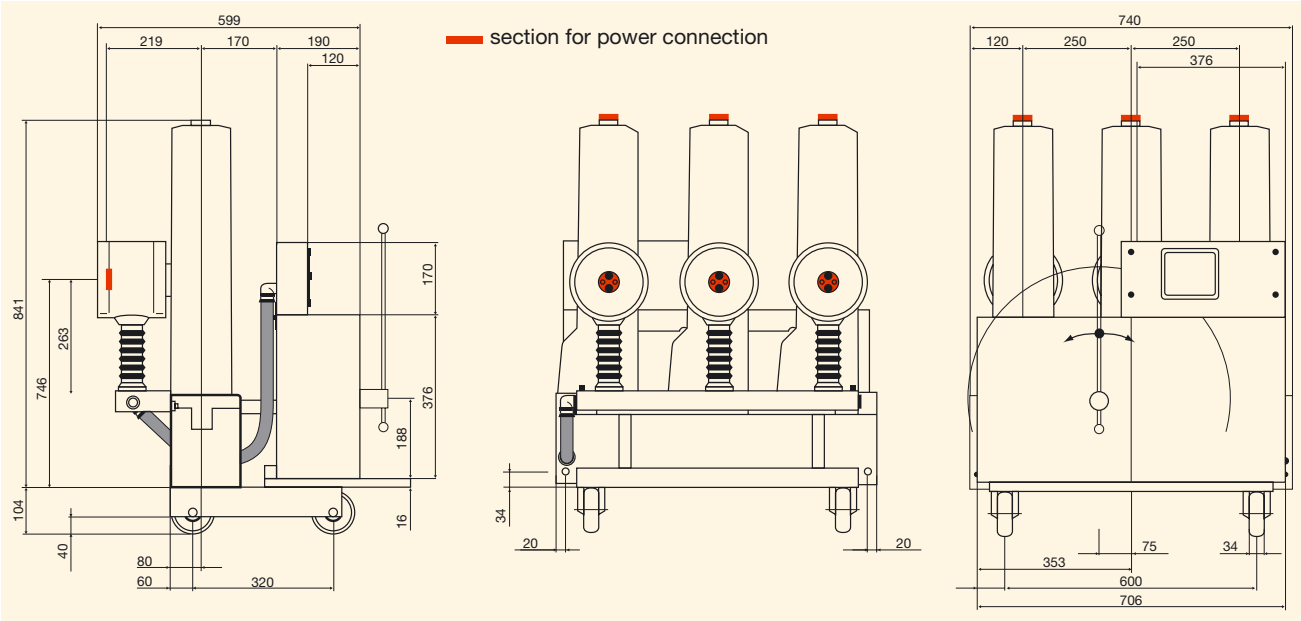

Dimensions and weights

For 12 and 24 kV circuit breaker
(36 kV on request)

Weight

Circuit breaker 630 A ≃ 160 kg.
Circuit breaker 800 A ≃ 175 kg.

Longitudinal arrangement

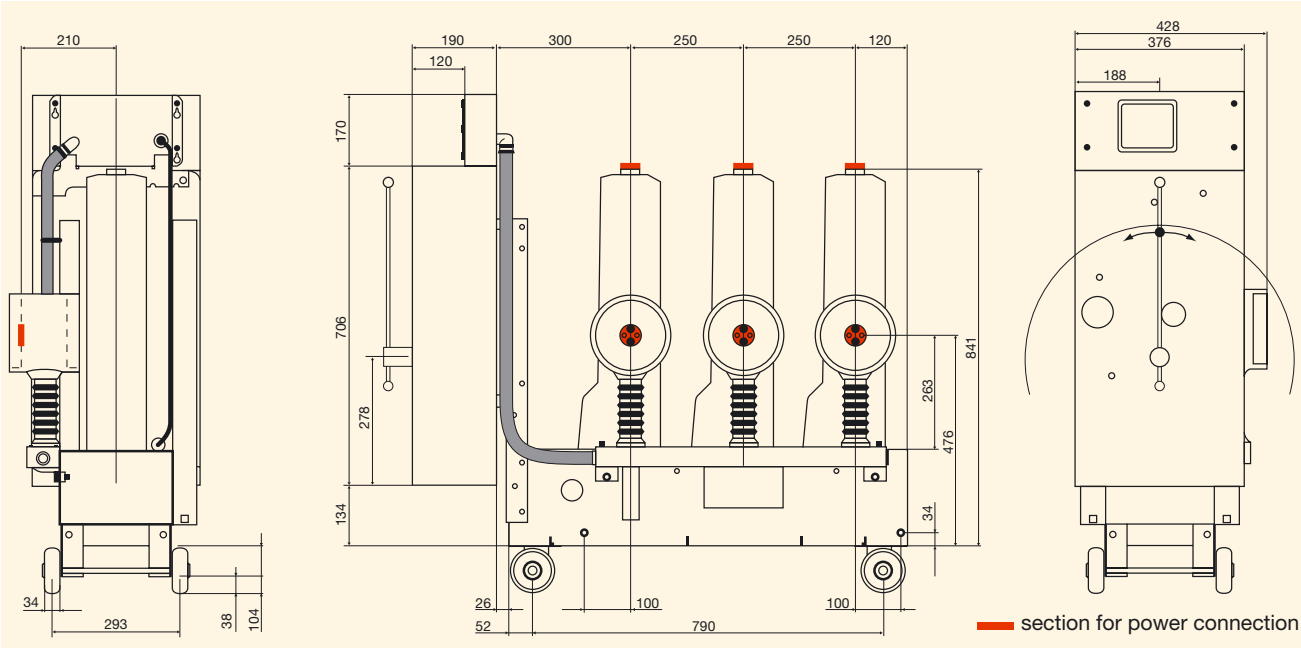

AREVA T&D Worldwide Contact Centre:
http://www.areva-td.com/contactcentre/
Tel.: +44 (0) 1785 250 070

www.areva-td.com

Products - L4PS - Orthofluor FP - V1 - 71148 - EN - © - AREVA - 01-2006. AREVA, the AREVA logo and any alternative version there of are trademarks and service marks of AREVA. The other names mentioned, registered or not, are the property of their respective companies. Printed in France. Our policy is one of continuous development. Accordingly the design of our products may change at any time. Whilst every effort is made to produce up to date literature, this brochure should only be regarded as a guide and is intented for information purposes only. Its contents do not constitute an offer for sale or advise on the application of any product referred to in it. We cannot be held responsable for any reliance on any decisions taken on its contents without specific advise.